IOPscience iopscience.iop.org

Home Search Collections Journals About Contact us My IOPscience

Electrical impedance myography at frequencies up to 2 MHz

This content has been downloaded from IOPscience. Please scroll down to see the full text.

2008 Physiol. Meas. 29 S345

(http://iopscience.iop.org/0967-3334/29/6/S29)

View the table of contents for this issue, or go to the journal homepage for more

Download details:

IP Address: 130.179.16.201
This content was downloaded on 05/09/2015 at 13:56

Please note that terms and conditions apply.

IOP PUBLISHING PHYSIOLOGICAL MEASUREMENT

Physiol. Meas. **29** (2008) S345–S363 doi:10.1088/0967-3334/29/6/S29

Electrical impedance myography at frequencies up to 2 MHz

C A Shiffman, H Kashuri and R Aaron

Physics Department, Northeastern University, Boston, MA, USA

Received 1 November 2007, accepted for publication 25 February 2008
Published 11 June 2008
Online at stacks.iop.org/PM/29/S345

Abstract
Extension of the frequency range of electrical impedance myography (EIM) to 2 MHz discloses a major rise in the reactance of muscle above 3–500 kHz, together with a slow decrease in the resistance consonant with the Kramers–Kronig relations. This 'upturn' phenomenon is found when the distant current electrode configuration of EIM is employed, but not when the current electrodes are placed close to the voltage measuring area. In that case the impedance qualitatively mimics the commonly used 3-element resistor–capacitor model. The possibility that the upturn is an artifact of the measuring system rather than a true property of the tissue is examined in detail. In particular, experiments are reported which argue against the transmission line mechanism proposed to explain similar increases in reactance in some high frequency whole-body BIA studies. Also, scaling of X versus R plots for muscle segments of different lengths strongly suggests that the upturn is as much a property of the underlying tissue as is the low frequency maximum in reactance.

Keywords: muscle, impedance, myography, EIM

1. Introduction

Electrical impedance myography (EIM) is an offshoot of bioelectrical impedance analysis or 'BIA' (Kushner 1992, Lukaski 2003) which seeks to correlate non-invasively measured impedance of muscle tissue with muscle health (Rutkove *et al* 2002.) Its early emphasis was on the phase, θ, on the grounds that the resistance (R) and reactance (X) are both inversely related to the cross-sectional area of the muscle and hence reflect muscle mass and shape as well as muscle tissue quality, whereas the area terms tend to cancel in the phase, since $\theta = \arctan(X/R)$ (Shiffman *et al* 1999). Indeed, good correlation has been found between decreasing phase and increasing disease severity for a wide range of muscle shapes and neuromuscular diseases. Similar correlations have been found for muscle deterioration during normal aging (Aaron *et al* 2006) and for increasing phase during recovery from disease and injury.

 © 2008 Institute of Physics and Engineering in Medicine Printed in the UK

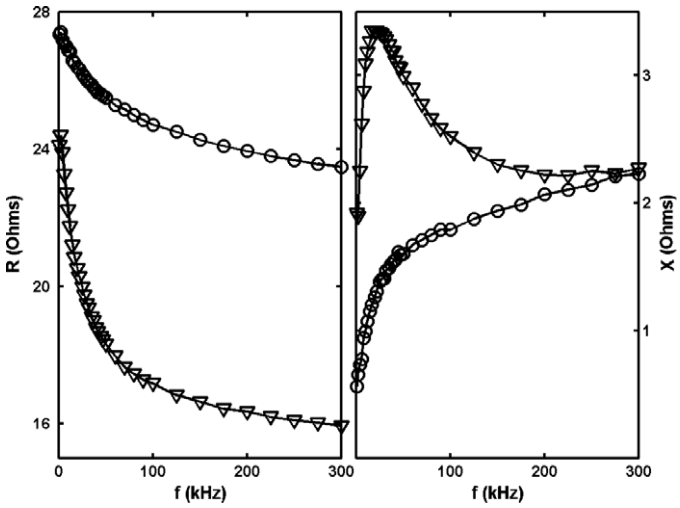

Figure 1. Resistance and reactance versus frequency for the quadriceps regions of a subject with highly asymmetric ALS: circles, the severely affected leg; triangles, the very lightly affected leg.

Most of the earlier work involved measurements at 50 kHz (Aaron and Shiffman 2000), but more recently the technique has been extended to multi-frequency measurements in the 1–300 kHz range, which we refer to as 'multi-frequency EIM' (MFEIM, Esper *et al* 2006). The object was to enable comparisons with the predictions of electrical circuit models of muscle tissue, in order to delve more deeply into the mechanisms for the changes in phase. But the extended range results have also revealed major qualitative differences in the frequency dependences of R and X in healthy versus diseased states, which suggests that MFEIM may find use as a purely phenomenological clinical tool. An example is given in figure 1, which compares $R(f)$ and $X(f)$ for the left and right quadriceps of a patient with highly asymmetric amyotrophic lateral sclerosis (ALS, Rutkove *et al* 2007). Early in its course ALS may affect only restricted regions of the body, and it is reasonable to assume that prior to onset of disease the impedances of the left and right limbs would have reflected much the same physiological and anatomical conditions, a view supported by bilateral 50 kHz studies of healthy subjects (Rutkove *et al* 2005a). The differences shown here are therefore free from the interpretive problems encountered when matching healthy subjects with diseased patients, and it is almost certain that they represent disease progression *per se*.

The present paper discusses extensions of MFEIM to 2 MHz and exhibits new features which are found in that enlarged range. Major emphasis is placed on technical issues which are encountered and on possible sources of error, and examples from measurements on normal subjects are included to establish appropriate context. The data were obtained with the cooperation of Seward Rutkove, MD of the Beth Israel Deaconess Medical Center in Boston, MA as part of a broader research program on EIM and with the approval of the hospital institutional review board. Written informed consent was obtained from the subjects whose data are reported here.

2. Measuring system

Figure 2 shows the essential features of the experimental arrangement, in this case as applied to measurements over the quadriceps of a seated subject. At the heart of the system is a wide

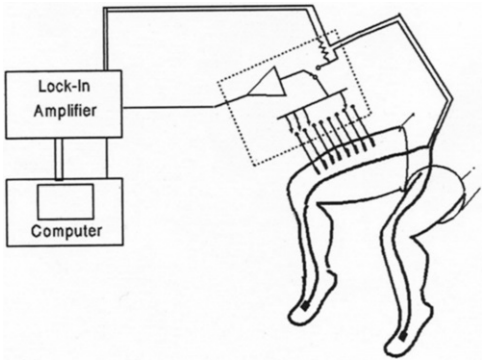

Figure 2. The essentials of the measuring system as applied to a seated subject, for clarity. The data reported here are for supine subjects.

frequency range lock-in amplifier (Signal Recovery Model 7280, Advanced Measurement Technology Inc., Oak Ridge, TN, USA), which supplies alternating current from its reference oscillator at frequencies up to 2 MHz, and which delivers digitized signals representing the real and imaginary parts of the voltages at the various electrodes or across a non-inductive current measuring resistor. The switching box indicated by the dotted rectangle contains computer driven miniature relays which sequentially select the voltages V_1, at the most distal voltage electrode, V_n at the nth member of the array, and V_c, across the current measuring resistor, from which impedances for the set of increasingly wide nested segments are calculated. (Values for short segments can later be found by subtraction.) The switching box is stationed about 10–15 cm from the voltage electrode array, and the leads to it are simple, unshielded wires terminated by 'alligator' clips. The voltage electrodes are adhesive Al/Ag/AgCl strips (Viasys Healthcare, Madison, WI, USA, part no. 019-766 400, cut to half length) placed 2–2.5 cm apart along a line parallel to the limb axis, and current is injected via disposable ground plate electrodes (Viasys part no. 019-400 500), placed far from the voltage array, as indicated in the figure. (The locations of the current injecting electrodes will figure prominently in what follows, and for brevity we will use the term I-electrode.)

This 'distant I-electrode' feature serves to insure that the current distribution in the region under investigation is determined by the anatomy (and posture) of the subject, rather than by current-spreading effects near the injecting electrodes. (A description of the deleterious consequences of 'near' I-electrode placement on 50 kHz measurements has been given by Rutkove *et al* (2005b).) Distant placement, however, has the effect of generating large common mode voltage, 10 or more times larger than that across the full array and perhaps 100 times what is found for the smallest segments. At low frequencies the common mode rejection ratio for the differential input mode of the lock-in amplifier is excellent but it drops at the rate of 6 dB/octave, and by 2 MHz it is inadequate for the present application. For that reason we use the instrument in its single-end mode, taking advantage of its wide dynamic range and high-resolution analog-to-digital conversion to provide adequate precision for the small differences between large numbers which are encountered.

The input capacitance of the lock-in amplifier also presents a problem for measurements using surface electrodes. At 2 MHz the 25 pF specified figure has a reactance only slightly greater than 3000 Ω. This might seem to be sufficiently high, since the magnitude of the impedance measured on typical limb segments is 1–2 Ω cm^{-1}, but two additional factors intervene. First, at 2 MHz the input impedance is almost entirely capacitive, and second, the

impedance of the voltage-electrode/skin/skin-fat layer complex can dominate the effective source impedance, rather than the muscle impedance *per se*. The resulting voltage divider then has the effect of rotating the effective source voltage away from the real axis into the complex plane, and given that the real part of the impedance is much larger than the imaginary part, even small rotations can lead to large errors in the reactance. For this (and other reasons to be discussed later) it is important to decrease the input capacitance of the system, and to that end the switching box includes the pre-amplifier stage indicated in figure 2. This is a commercial oscilloscope probe whose input impedance is specified as 1 megohm in parallel with less then 1 pF (Tektronix model P6243, Beaverton, OR, USA), and indeed our tests indicate about one-half that capacitance. Of course, the overall value will be larger, and pains have been taken to keep wiring capacitance to a minimum, for example the use of unshielded leads between the switching box and the voltage electrodes.

The current flowing in a limb can couple magnetically with the voltage measuring loop, and simple calculations show that the mutual inductance will lie in the sub-microhenry range for the voltage leads arrangement shown in the figure and typical muscle dimensions. Its effect will be linear in frequency, amounting to several ohms of inductive reactance at 2 MHz, making the expected *capacitive* reactance of the tissue appear smaller than its true value. The 'mutual inductance compensating' wiring shown in figure 2 has therefore been adopted, in which the magnetic fields due to currents flowing in the body are (partially) offset by equal but opposite currents flowing outside it. The spatial distributions of the competing currents are different, of course, and the cancellation cannot be complete.

3. Results

3.1. The 'upturn'

Figure 3 shows plots of resistance, $R(f)$, and reactance, $X(f)$, as measured over the quadriceps of a 23 year old healthy (supine) female subject. Two unexpected features are the major rise in X for $f > 300$ kHz and the continued fall in the resistance in that range. For convenience we will refer to the combined behaviors as the 'upturn' phenomenon. The expectations are relative to the properties of the well-known '3-element circuit' frequently used to model bioimpedance data, in which the capacitor C represents the cell membrane, and the resistors r_1 and r_2 represent the extracellular and intracellular fluids, respectively. Its impedance is given by

$$R = r_1 \frac{1 + r_2(r_1 + r_2)\omega^2 C^2}{1 + (r_1 + r_2)^2\omega^2 C^2} \qquad \text{and} \qquad X = r_1 \frac{r_1 \omega C}{1 + (r_1 + r_2)^2\omega^2 C^2},$$

and the insets show that the R and X data below 100 kHz qualitatively conform to these expressions. But it is easy to see that at high frequencies the theoretical expressions lead to $X \propto 1/f$ and $R \approx$ constant, in contrast to what is found. This is emphasized by the dashed curve in figure 3(b), which represents a matched-slope $1/f$ extrapolation of the data in the 100–200 kHz range. We return to this and the zero-slope line in figure 3(a) in section 4.2.

Figure 4 shows similar data for the quadriceps region of a 72 year old male, together with the results obtained when the distant current-electrode condition is violated (cf section 2). Specifically, the triangles represent data obtained using the I-electrode placement shown in figure 2, while the circles are for (narrower) current electrodes placed 2.5 cm from the start and end of the voltage electrode array. (The two sets of data were obtained within minutes of each other, and the same voltage electrodes were used.) Two features of the 'near electrode' case stand out immediately. First, at low frequencies R and X are three to four times larger than

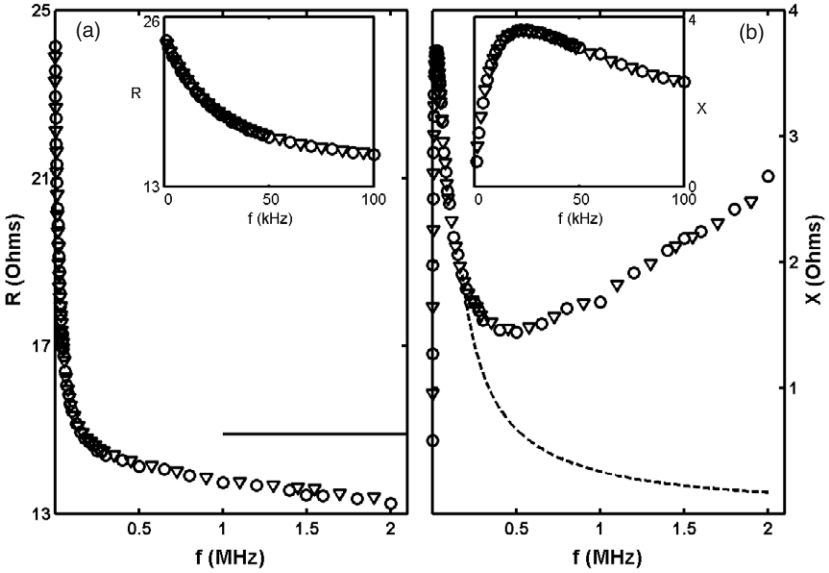

Figure 3. Resistance (a) and reactance (b) as functions of frequency for the quadriceps region of a healthy 23 year old female subject. Circles and triangles represent data for two placements of the distal current injecting electrodes, as discussed in section 4.1. The dashed reactance curve in (b) and the horizontal bar in (a) represent extrapolations based on the 3-element *R–C* model fitted to data below 200 kHz.

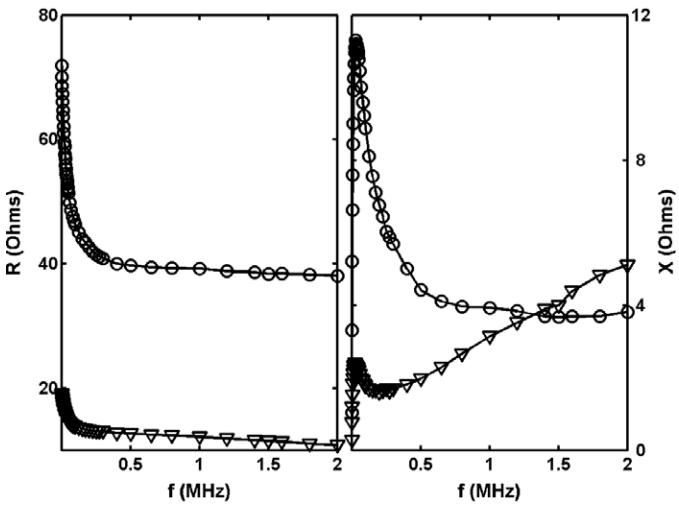

Figure 4. Distant and near placement of the I-electrodes for the quadriceps of a 73 year old healthy male. Triangles are for the standard, distant placement illustrated in figure 2; circles are for I-electrodes placed 2.5 cm from the ends of the voltage measuring array.

when distant I-electrodes are used (persisting to all frequencies in the case of *R*), and second, the 'upturn' is much less pronounced (or displaced to frequencies well above 2 MHz). Both features point to the critical role played by the details of the current distribution in the muscle. Furthermore, they emphasize the practical importance of distant I-electrode placement, since

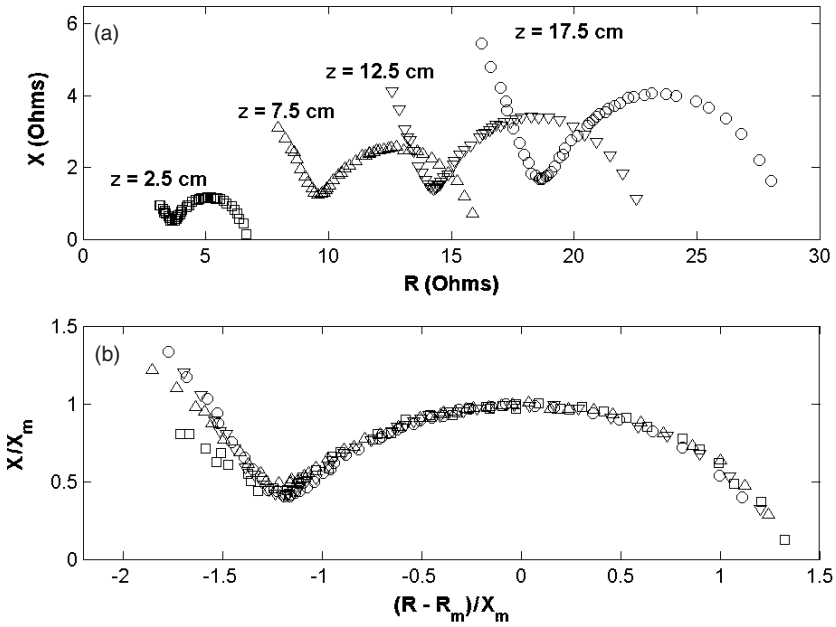

Figure 5. Distant I-electrode Nyquist plots for four of seven nested segments along the quadri-ceps of a healthy 21 year old female subject. Segment lengths are given by 'z': (a) raw resistance and reactance values; (b) the reduced variables plot described in the text.

for near I-electrodes even small variations in placement can substantially affect the results. (Both sets of data are for the outermost pair of voltage electrodes, 12.5 cm apart. Qualitatively similar features obtain for smaller segments.)

It is interesting to note that the (distant current electrode) upturn for this 73 year old male subject is qualitatively the same, but quantitatively more pronounced than what is shown for the 22 year old female in figure 3. In contrast, the behaviors at frequencies below about 100 kHz are very much the same, showing only the modest decrease in phase with age demonstrated earlier using 50 kHz data alone (Aaron *et al* 2006). But it remains to be seen whether age as such plays a major role in the higher frequency range.

3.2. Nyquist plots

Plots of $X(f)$ versus $R(f)$ are often used in the discussion of body impedances, in particular they are a principal tool in BIA where they enable extrapolations to zero and infinite frequencies. (Often referred to as 'Cole–Cole plots' (Cole and Cole 1941), we will use the term 'Nyquist plot', since the methods and goals of MFEIM and BIA are very different). Figure 5(a) shows such plots for a set of nested segments along the thigh of a 21 year old female subject, in which the symbol 'z' indicates the length of the segment as measured from the most distal electrode, which is common to all segments. The upturn is clearly visible in all the curves, and in each case it has approximately the same magnitude relative to the low frequency maximum for the segment. The similarity is confirmed by the 'reduced-variable Nyquist plot' in part (b) of the figure. This shows X/X_{m} versus $(R - R_{\mathrm{m}})/X_{\mathrm{m}}$, where (for each z) X_{m} is the low frequency maximum in X, and R_{m} the resistance at which it is found. The essential point is that the curves are virtually coincident over the entire frequency range, except

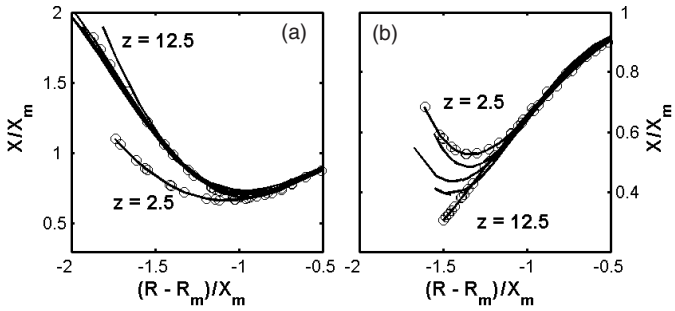

Figure 6. High frequency regions of reduced variables Nyquist plots for the subject of figure 4: (a) distant I-electrodes, and (b) I-electrodes placed 2.5 cm from ends of the voltage electrode array. 'z' specifies the length of the segment. For clarity, data are shown only for the shortest and longest segments.

possibly for the shortest segments, where the agreement is nevertheless very good over most of the range. We refer to this behavior as 'scaling', and it has been found for virtually every muscle of every subject which has been examined, though not always to such high accuracy or for short, distal segments. (Scaling is guaranteed for semicircles with center on the real axis, of course, and for depressed zero semicircles with the same 'phase angle'; cf Cole (1968). Also, it is important to remark that while the *curves* for the different segments coincide, the individual points do not. This will be significant when it comes to examining the conditions necessary for scaling.)

The importance of current-electrode placement emerges in this context as well. Figure 6 presents expanded views of the high frequency parts of the reduced Nyquist plots for the subject depicted in figure 4, for distant, figure 6(a), and near placement, figure 6(b). In both cases the full plots shows excellent scaling at lower frequencies, and in the distant electrode case scaling continues to 2 MHz as well, except for the smallest segment. But when the near I-electrode arrangement is used there is complete breakdown at high frequencies. Furthermore, the upturns are substantially suppressed, and when expressed in reduced variables the magnitude of what remains varies systematically with segment length, largest for the shortest segment, and essentially zero for the longest one.

3.3. Mutual inductance effects

Section 2 calls attention to possible effects of mutual inductance coupling between the current and voltage measuring loops, which can significantly affect the accuracy of the measurements at high frequencies. Correspondingly, in examining test–retest reproducibility of the method in the high frequency range this can lead to misleading conclusions unless care is taken to insure that the spatial disposition of the entire current leads system is the same on both occasions, i.e., different arrangements will give rise to different mutual inductances. The tell-tale for this scenario is that the difference in X values between the two runs is strictly proportional to frequency, and that there is no difference in R values. (A complicating factor is that the voltage electrodes may not be placed at exactly the same locations on the two occasions, but this can be adjusted by multiplying both R and X for one of the data sets by the ratio of very low frequency resistances found for the two.) Figure 7 gives an example of this, obtained before the inductance compensating scheme of figure 2 was implemented. It shows data taken two weeks apart on the biceps of a healthy 22 year old female subject, where a very large discrepancy between the reactance (but not resistance) values is found and essentially removed

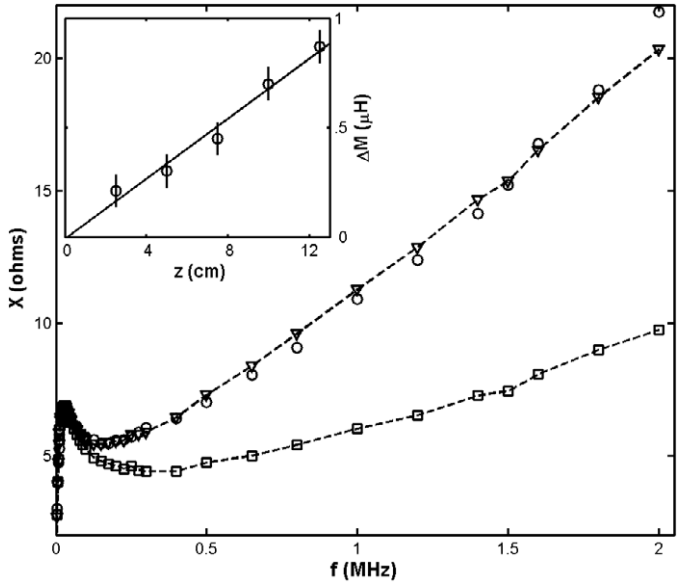

Figure 7. Mutual inductance effect as measured on the biceps of a healthy 22 year old female subject, without the use of the compensating scheme described in the text. Main figure: squares and circles show data taken two weeks apart; triangles show the effect of an 0.87 μH inductance correction to the squares data. Inset: dependence of mutual inductance correction on segment length.

by an 870 nH mutual inductance correction. The main figure is for the full span of the voltage electrode array, 12.5 cm in this case, while the inset shows the mutual inductance corrections for nested segments of length z.

Proportionality to f and linearity in z are strong evidence in support of the mutual inductance argument. Figure 8 provides a more direct demonstration of these effects and its amelioration by the leads arrangement of figure 2. Here the results are for the tibialis anterior (TA) of a 50 year old healthy male, measured twice on the same occasion, with and without the mutual inductance compensating leads scheme. It is clear from figure 8(a) that there is virtually no difference between the resistance values for the two measurements, while figure 8(b) shows that the 'uncompensated' wiring gives reactances well below what is found when the compensating arrangement is used. Figure 8(c) shows that this is exactly compensated by a 125 nH mutual inductance correction to the first of these.

It is worth noting that the sign of the inductance correction is what is expected if currents flowing *in* the limb are the major contributor, as discussed in section 2. But careless draping of the current leads near the voltage measuring loop can lead to the reverse situation as well, and the use of the compensating wiring virtually guarantees avoidance of such mishaps. Of course, that is not to say that the wiring scheme necessarily leads to the *correct* reactance, since some coupling between the current and voltage measuring loops undoubtedly remains, as well as other factors.

3.4. Circuit models and networks

The existence of the upturn is clearly incompatible with the standard 3-element circuit, and in any case that model is, in principle, flawed by its assumption that the interior of a cell

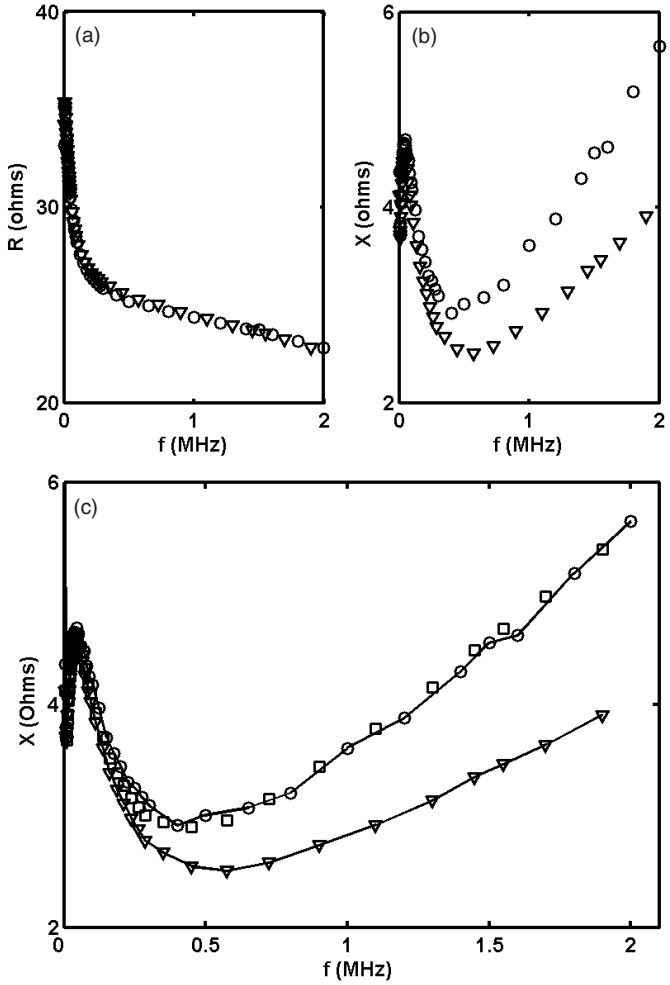

Figure 8. Mutual inductance compensation: TA data for a 50 year old male subject. (a) $R(f)$: circles with, and triangles without the use of the mutual inductance compensating scheme. (b) $X(f)$ with same coding. (c) $X(f)$: circles as before; squares: the triangles data with an 125 nH mutual inductance contribution.

can be adequately represented by a pure resistance (Schwan 1999). The interior is extremely complicated, of course, involving a multitude of internal membranes and compartments. There is little hope that one can find circuit models which represent the interior in anything approaching anatomical detail, but simply allowing the interior to have reactance is a first step. Various circuits have been proposed (Schwan 1957, Barsoukov and MacDonald 2005), and we have adopted the 5-element model shown in figure 9(a), which has the feature that it can behave as a 3-element circuit at low frequencies if C_2 is small enough. Similarly, at frequencies high enough that C_1 is essentially a short circuit it is transformed into a second 3-element circuit, in which the parallel combination of r_1 and r_2 plays the role of r_1, the new resistor r_3 plays the role of r_2, and C_2 substitutes for C_1 (cf figure 9(b)). With proper choice of parameters there can then be two maxima in X, but if the second occurs beyond the range

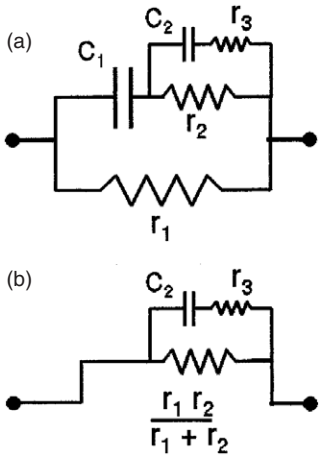

Figure 9. (a) The 5-element circuit adopted in this work, and (b) the effective 3-element circuit at high frequencies.

of the measurements the only evidence will be a quasi-linear rise in X much like that which is seen at very low frequencies, i.e., an 'upturn'.

Figure 10 is an example of the fit of the model to data from the quadriceps region of a 24 year old male subject. Points from two measurements are shown, taken two weeks apart, and a 45 nH mutual inductance correction has been applied to the second set of data, represented by the triangles in the figure. The solid curves represent a complex, nonlinear least-squares fit to the first set, with parameters shown in the resistance plot. (Data were taken at 46 frequencies, giving 92 independent values to be fitted by a five-parameter expression, which leaves 87 'degrees of freedom.') The fit is quite good, though the data hint at a second maximum in X while the fitted curve does not, and there is some disagreement near the low frequency maximum as well. But considering the complexity of the real muscle one can hardly expect perfect agreement. If nothing else, simple models of this type cannot represent the shape of the muscle and the anisotropy of muscle tissue. One can get some idea of the significance of those factors by examining multi-module networks such as shown in figure 11, and calculating impedances using voltages at intervals along the sloping upper boundary, as indicated. (The overall shape of the network is not intended to represent any particular muscle.) For example, if each of the modules contains the same 5-element circuit, then the frequency dependence of the impedance calculated anywhere along the boundary will be the same as that for a single circuit. But one can easily arrange to make horizontal (longitudinal) and vertical (transverse) circuits uniformly different, so as to build anisotropy into the model. A simple example has bearing on the phenomenon of 'scaling' which plays an important role in understanding the origin of the upturn phenomenon. Figure 12 shows the reduced Nyquist plot constructed from a calculation in which longitudinal and transverse parameters have been chosen to reasonably represent the distant I-electrode data shown in figure 4. As one sees, scaling is on the whole excellent, except for the results for $V_2 - V_1$, indicated by the circles and representing the shortest segment of the muscle. The point here is that the frequently encountered weakening of scaling for the most distal segment in real measurements can be mimicked by networks of impedance modules, all having the upturn property. It is also important to note that scaling is not an intrinsic property of network models of this type; it is all too easy to choose parameters for the modules which completely destroy it.

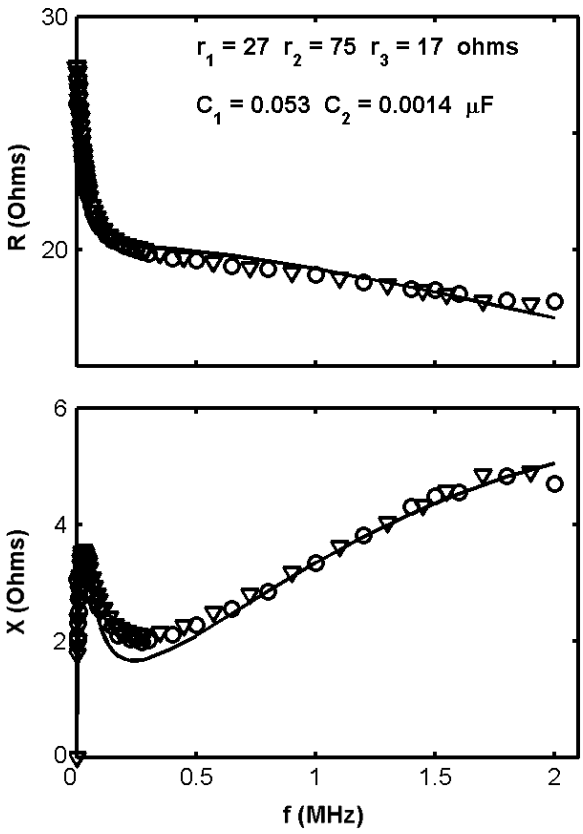

Figure 10. Least-squares fit to the 5-element circuit: measurements two weeks apart over the quadriceps of a 24 year old male subject. (A 45 nH mutual inductance correction has been applied to the triangles data.)

4. Artifacts and sources of error

The electronic system used in these measurements has been tested extensively against lumped-circuit 'dummies' of various constructions, and the procedure and results are discussed in the Appendix. It is clear from those studies that the 'upturn' behavior described here cannot be an artifact of the instrumentation *per se*. But tests against lumped circuits are only a first step, since there may be properties of an extended, inhomogeneous system such as the human body which cannot so easily be simulated.

This section deals with three important examples.

4.1. The transmission line effect

de Lorenzo *et al* (1997) have claimed that behavior similar to the upturn occurs in whole body BIA, and that there it is an artifact reflecting time delays for signals traveling through the body, regarded as a transmission line. Scharfetter *et al* (1998) have argued against this, concluding that the effect would be far too small, and therefore that the rise in X at high frequencies might well reflect genuine properties of the tissue. Nevertheless the question remains whether such a 'transmission line' mechanism may be affecting the present measurements. The use

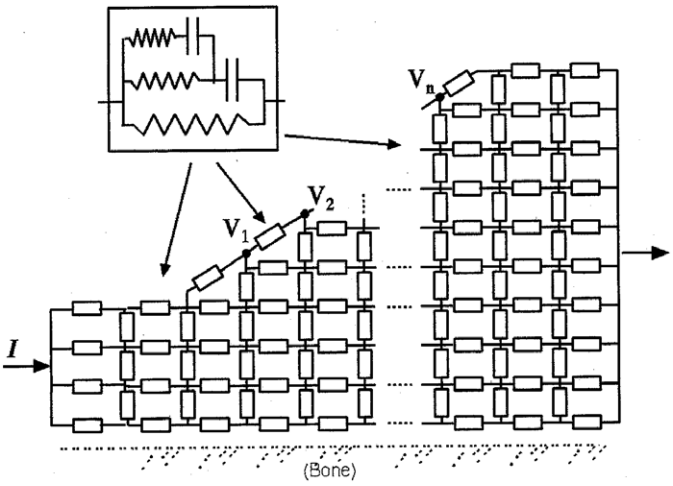

Figure 11. Network model incorporating anisotropy. Horizontal and vertical boxes indicate 'longitudinal' and 'transverse' 5-element circuits.

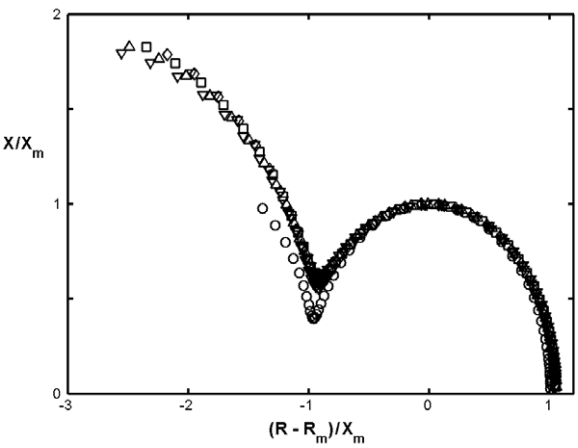

Figure 12. Reduced variables Nyquist plots for the network of figure 11, different symbols representing the impedances between V_1 and the various V_n. The circles are for the shortest segment.

of distant I-electrodes makes a direct test possible, since in any transmission line the length variable, d, must occur in the combination $(f \cdot d/u)$, where f is the frequency and u the propagation velocity. A simple model of how this applies to MFEIM is shown in figure 13(a), which incorporates the essential fact that the current is measured in one place and voltage drops are measured along a segment of muscle a substantial distance d away. If the true impedance of the segment is Z_0, then the apparent impedance $Z \equiv V(d)/I(0)$ is given by $Z = Z_0 \exp(-2\pi \mathrm{i} \cdot f d/u)$. MFEIM allows one to check this scenario by simply changing d, as sketched in figure 13(b). That is, if d is cut in half (say) then the apparent impedance found at frequency f should be the same as was found for the original d but at $f/2$. The two data sets in figure 3 are the results of just such an experiment, and one can see that they are

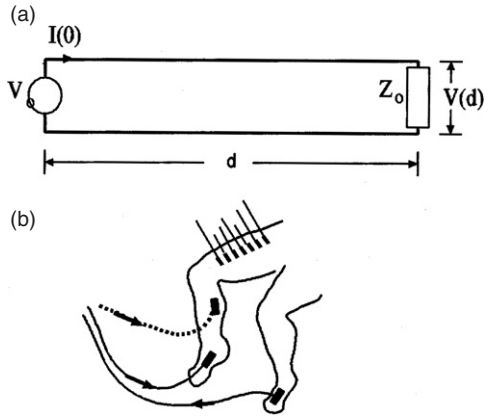

Figure 13. (a) Transmission line model for MFEIM measurements using distant I-electrodes. (b) The length of the current path through the body (roughly twice the length d in (a)) is shortened by shifting one current electrode nearer to the voltage measuring array (represented by Z_0 in (a)), as indicated schematically by the dashed curve.

virtually indistinguishable. Needless to say, the real system lacks the symmetry and simplicity of the parallel conductor prototype of figure 13(a), and consequently just what one should choose for 'd' is unclear. But according to figure 3(b) the purported 'error' in the reactance which the transmission line effect was to explain is almost 3 Ω at 2 MHz, so the excellent agreement between the shifted and un-shifted current-electrode data argues forcibly against such a mechanism.

4.2. Kramers–Kronig relations

This does not exclude other artifacts, of course, but use of the Kramers–Kronig (K–K) relations (Kronig 1926, Kramers 1929) virtually rules out the possibility that the discrepancy between the reactance and the extrapolated '3-element behavior' is *entirely* due to an artifact affecting the measurements. These relations state (in part) that the difference between the zero and infinite frequency resistances is related to the reactance by

$$R(0) - R(\infty) = \frac{2}{\pi}\int_0^\infty \frac{X(f)}{f}\,\mathrm{d}f.$$

If the true X indeed follows the dashed curve in figure 3(b), then the integral can be evaluated numerically using the data up to, say, 200 kHz, and then continued analytically to infinity using the $1/f$ extrapolation. Since $R(0)$ is known, $R(\infty)$ can be found and the result for the present case is 14.9 Ω. This is indicated by the horizontal bar in figure 3(a), which lies clearly above the measured resistance at 2 MHz. In fact $R(f)$ is still decreasing linearly there, so $R(\infty)$ is much smaller than R(2 MHz) and the discrepancy must be even larger than shown. Furthermore, the structure of the Kramers–Kronig relation dictates that X must rise above the extrapolated 3-element circuit values if violation is to be avoided, and substantially so in order to overcome the $1/f$ weighting of the integrand. That is just what the measured values do, and compatibility of the data with the K–K rule, while not proven, is certainly possible. In contrast, the putative 3-element model certainly fails the compatibility test. (Lacking a guide for extrapolating to much higher frequencies, it is impossible to go beyond compatibility to see if the data actually *satisfy* the K–K relations.)

4.3. Intrusive impedance and stray capacitance effects

The Kramers–Kronig argument applies to the entire circuit on which potentials are measured, including the impedances of the various electrodes, the input impedance of the detector, inductive couplings to the leads system and current paths through stray capacitances. Compatibility with the K–K relations is therefore hardly a guarantee of the accuracy of the data, as has already been demonstrated regarding mutual inductance effects. Stray capacitances are notorious trouble-makers for accurate high frequency work, particularly in dealing with the large dimensions encountered in measurements on human subjects. There is no practical way to predict their consequences except by solving the loop equations for the system as a whole, including each putative coupling. With the aid of the computer such an approach allows one to conveniently and quickly examine the consequences for the entire frequency range, for different values of the offending capacitance, realistic detector input conditions and different conditions at the electrode–skin interface. An outline of such an analysis is given in the Appendix, whose results we summarize here. First, if the input capacitance of the detector is too large and the effective impedances of the voltage electrodes are large and unequal, then a wide variety of spurious impedance versus frequency curves can be generated, including some roughly mimicking the upturns which have been observed. Second, the major stray capacitances are between subject and ground, and under readily achievable conditions at the voltage electrodes and low detector input capacitance (hence the use of the $C < 1$ pF probe), these have the effect of pulling the reactance *down* at high frequencies, rather than up. It is true that capacitive coupling from the high potential side of the current supply does pull the reactance up, but the effect is far too small to account for the major changes in X involved in the upturns. It should be emphasized, however, that these conclusions are based on lumped-parameter circuit analysis of a continuous medium problem, and should not be used to make statements about the *accuracy* of the data. The purpose here is to show that stray capacitances are unlikely to be responsible for the upturns, and in that context it is important to note also that significant contributions from such coupling would have the effect of spoiling the excellent scaling of the reduced Nyquist plots.

5. Discussion

The weight of evidence presented here argues strongly that the 'upturn' is a genuine property of the underlying muscle tissue. The most persuasive case is made by the scaling of the Nyquist plots when distant current injecting electrodes are used and, equally important, its failure when the near I-electrode arrangement is employed instead. Regarding the first point, scaling has been observed in virtually every case which has been examined using distant current injecting electrodes, though with frequent exception of the shortest, most distal segment of the muscle, as in figure 5(b). Given the ubiquity of the phenomenon and the fact that scaling parameters found from data in the 'low' frequency range govern the entire behavior up to 2 MHz, it is reasonable to conclude that the upturn is as much a feature of the underlying tissue as is the 'standard' behavior below 100 or 200 kHz.

The fact that scaling fails when the near I-electrodes arrangement is used (with the same voltage-electrode array) demonstrates that the *distribution* of the current within the body is a key element distinguishing the two cases. The essence of this statement is illustrated by figure 14, which sketches equipotential contours for a hypothetical cylindrical muscle, for distant and near I-electrode placements. The equipotentials are represented by the dashed curves, and it is clear that in the distant electrode case V_1 and V_2 would be determined almost entirely by longitudinal currents, while for near I-electrodes substantial contributions would

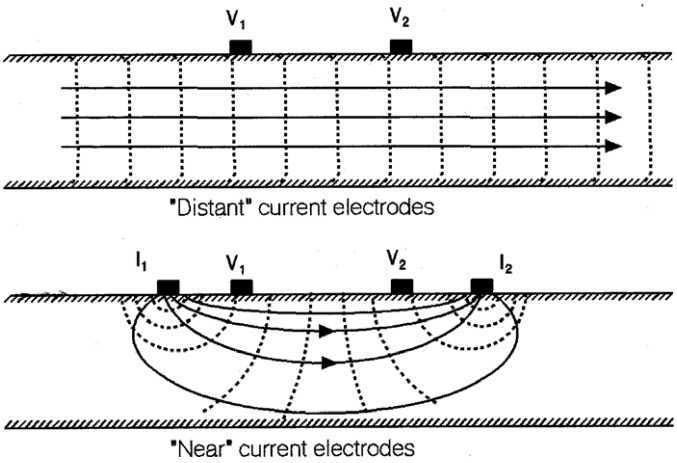

Figure 14. Current flow lines and equipotentials for distant and near placement of the current electrodes on a hypothetical cylindrical muscle.

be made by *transverse* currents as well. Furthermore, in the near I-electrode case the current distribution is far from uniform (indicated by the spacing of flow lines in the figure), which in effect reduces the cross-sectional area and thereby increases the impedance. As noted, R and X are in fact both many times larger in the near I-electrode case.

A more complete discussion of these contrasts would be beyond the purposes of this paper, but one further point should be made. Comparing the scales for the y-axes of figure 6 shows that the upturn is substantially reduced when near I-electrodes are used, virtually disappearing for the longest segments. The fact that the upturn is destroyed by an effect which so clearly depends on the distribution of currents inside the muscle certainly implies that the upturn arises from currents flowing inside the muscle.

In the distant I-electrode case, the overall behavior of the impedance is quite well represented by the 5-element equivalent circuit. A major feature of that model is the second maximum in the reactance, and while the data shown in figure 10 do hint at a maximum just below 2 MHz, the data of figure 2 show no sign of one. Most subjects examined so far show only slight concave-down curvature at high frequencies, while a few do exhibit shallow maxima in the 1.5–1.8 MHz region. Assuming that the 5-element model is valid, a survey of the overall evidence suggests that the second maximum will usually lie above 2 MHz, i.e. roughly 50 times higher than the low frequency one.

One hardly expects that the impedance can be accurately represented by a simple circuit of any type, in particular when highly flared muscles are involved. Network models of the type shown in figure 11 can be developed which more realistically represent the size and shape of a muscle, and in particular the anisotropy of its tissue, but these would have so many adjustable parameters that they would likely be of little practical use in examining frequency dependences. However, networks may prove useful as test-beds for hypotheses about real muscle. For example, the case shown in figure 12 suggests that the failure of scaling for end-segments of a muscle may simply represent geometrical features affecting the current distribution rather than differences in local character of the tissue itself. Correspondingly, the failure of scaling for the short segment of the quadriceps in figure 5 might simply be a consequence of a segment lying too close to the knee.

For completeness, we should note that the upturn phenomenon can also be represented quite well by impedance modules containing two different 3-element circuits in series, but it is difficult to see how to connect that with cell structure. (There is also a problem for data analysis, since there are infinitely many parameter combinations which give the same zero frequency resistance.) The motivation for inserting the extra capacitor and resistor into the 3-element model was to simply to allow that the intracellular medium likely has reactance. But the added branch does suggest the membranes and internal fluids of the organelles of real cells, and it is an interesting question whether extended high frequency impedance measurements can provide *in vivo* information on deep cell properties. There is certainly long standing evidence of intracellular effects in the impedance of compact biological systems. For example, Cole and Cole (1936) have found either 'upturns' or fully developed second maxima well above 1 MHz in suspensions of various marine-life eggs. Also, Pauly *et al* (1960) showed that suspensions of mitochondria have reactance maxima at about 5 MHz, though it can be argued that the density of such organelles will be too small to have a measurable effect on the impedance of intact tissue (Pliquet *et al* 2007). In any case the difficulties confronting *in vivo* measurements on humans should not be minimized. As the frequency increases so do the experimental problems discussed here, all connected to the non-invasive character of EIM.

Acknowledgments

We are pleased to thank Dr Seward Rutkove for many helpful and stimulating discussions regarding the study of neuromuscular diseases using impedance techniques. Figure 3 is reproduced from Shiffman *et al* (2007), with the kind permission of Springer Science and Business Media. This work was supported by the United States National Institutes of Health, under grant R01-NS42037-01 A2

Appendix

A.1. Tests against 'dummy' (discrete component) circuits

Since a major issue is whether the upturn is an artifact of the measuring system, one should choose a dummy which is guaranteed not to exhibit such behavior. Carbon composition resistors are convenient and useful choices due to their low inductance, but since they are known to show capacitive reactance (Bowick 2008), the circuit should make that factor irrelevant. The requirements are satisfied by the simple parallel R–C combination, in which capacitance in the resistor simply adds to that of the capacitor. Also, there can be no question about the high frequency limits of the impedance; the real and imaginary parts must both tend to zero. Figure A1 shows the results of such a test.

The solid curve in the figure is the theoretical prediction, based on values of the components found from measurements of the zero frequency resistance and the slope of ω/X versus ω^2 ($\omega = 2\pi f$), using data for frequencies below 300 kHz to minimize possible inductance effects. As the figure shows, the agreement with theory is excellent over the entire 1 kHz to 2 MHz range. The agreement for $R(f)$ is equally good, and at 2 MHz it is less than 0.6% of its zero frequency value.

When the same procedure is applied to standard 3-element dummy circuits, we invariably find that there are weak but progressive differences between measured and predicted values of X above about 1.5 MHz, sufficient to produce an 'upturn' of as much as several tenths of an ohm at 2 MHz. The details depend on the components used and physical layout of the circuit, and we attribute such upturns largely to parasitic capacitances in r_2, the 'intracellular fluid'

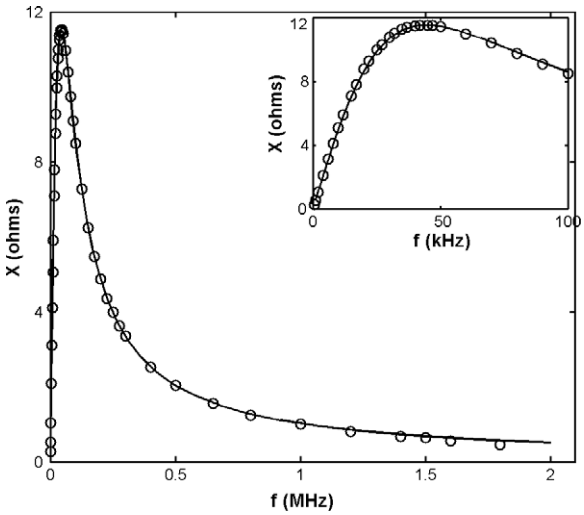

Figure A1. Test of the measuring system against a discrete component circuit. Reactance versus frequency: the solid curve is the theoretical behavior.

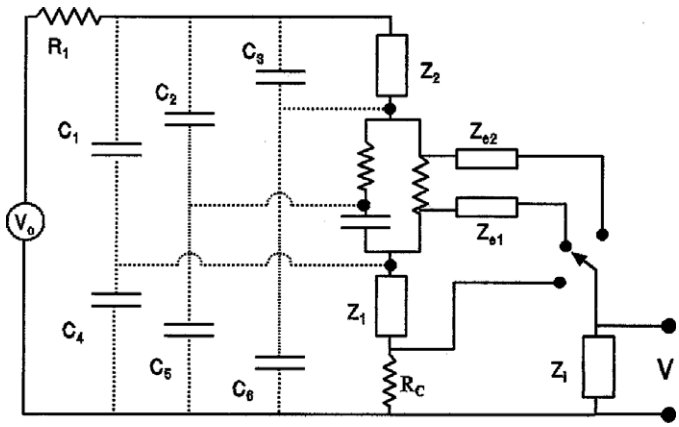

Figure A2. Measuring system circuit incorporating stray capacitance couplings.

resistor. (Capacitance in parallel with r_2 transforms the circuit into a '5-element' one, in which r_3 is very small.) In any case, the worst of the deviations from theory are small compared to the multi-ohm upturns found for the human subjects.

A.2. Stray capacitance effects

Figure A2 shows the equivalent circuit for the measuring system, supplemented by discrete capacitors representing likely stray capacitive couplings. The region of the muscle under the voltage electrode array is represented by the un-labeled 3-element circuit, adopted simply for convenience. The rectangles labeled Z_1 and Z_2 represent limb impedances outside that region, Z_{e1} and Z_{e2} stand for the impedances of the voltage-electrode/skin/skin-fat complex and Z_i represents the input impedance of the detector. In the calculations these are replaced

by resistor–capacitor circuits. R_C is the current measuring resistor and R_1 is a current limiting resistor. The capacitors C_1 through C_6 couple various parts of the voltage measuring region to the high and low sides of the current supply, and they are approximations to what holds for such a spatially distributed complex as a person lying on a bed or cart, the frame of which is at an indeterminate potential with respect to the detector ground terminal. (The connection to the *R–C* junction of the 3-element circuit is a construct allowing that the real muscle is many centimeters long and there will be capacitive coupling distributed along it. In the figure the membrane capacitor is located at the low side of the junction, but the calculations include the opposite case as well, with the resistor on the low side.) The procedure is straightforward; $C_{1\text{–}6}$ are considered singly and the loop equations are solved for the corresponding capacitor location, for each of the indicated switch positions. The apparent muscle impedance, Z_{mus}, is calculated in the same way as in the real measurements, and the corresponding $R(f)$ and $X(f)$ are plotted for comparison with the corresponding curves for the isolated 3-element muscle circuit.

Choices of the parameters in Z_1 and Z_2 are informed by data obtained in the course of the impedance measurements on human subjects, and Z_{e1} and Z_{e2} by dedicated *three*-terminal experiments. As a starting point, the detector impedance, Z_i, is taken from the probe manufacturer's specification, but other values of input capacitance are also considered, to allow for wiring contributions. The overall picture is summarized in the main text, and it is based on the following estimates for the stray capacitances. $C_{4,5,6}$ are the 'large' capacitors of the system, representing a supine whole body ($A \approx 1$ m^2) separated from a conducting table at ground potential by a $d \approx 10$ cm insulating pad ($\varepsilon = \varepsilon_0$), i.e. all about 10 pF; $C_{1,2,3}$ are the small capacitors of the system, arising from the roughly 10^{-3} m^2 high-side I-electrode (cf figure 2) separated from the voltage electrode array by about 0.75 meter, i.e. much less than 1 pF. Of these, C_6 and C_3 have no effect on Z_{musc} whatever their magnitude. Although they alter the total current, the part flowing through the muscle still flows through the current measuring resistor, R_C. On the other hand, C_4 and C_5 can have a substantial effect, but they *decrease* the reactance at high frequencies rather than increase it. The effects of C_1 and C_2 is to pull X upwards, but the shift is much too small to explain the observed upturns. We note also that if C_1 was large enough to account for the upturn, that would completely destroy scaling of the Nyquist plots. To a lesser extent, this holds for C_2 as well.

References

Aaron R, Esper G J, Shiffman C A, Bradjonic K, Lee K S and Rutkove S B 2006 Effects of age on muscle as measured by electrical impedance myography *Physiol. Meas.* **27** 953–9

Aaron R and Shiffman C A 2000 Using localized impedance measurements to study muscle changes in injury and disease *Ann. New York Acad. Sci.* **904** 172–80

Barsoukov E and MacDonald J 2005 *Impedance Spectroscopy, Theory, Experiment and Applications* (Hoboken, NJ: Wiley)

Bowick C 2008 *RF Circuit Design* 2nd edn (Amsterdam: Elsevier) p 11

Cole K S 1968 *Membranes, Ions and Impulses* (Berkeley, CA: University of California Press) p 24

Cole K S and Cole R H 1941 Dispersion and absorption in dielectrics: I. Alternating current characteristics *J. Chem. Phys.* **9** 341–51

de Lorenzo A, Andreoli A, Matthie J and Withers P 1997 Predicting body cell mass by using theoretical methods: a technological review *J. Appl. Physiol.* **82** 1542–88

Esper G J, Shiffman C A, Aaron R, Lee K S and Rutkove S B 2006 Assessing neuromuscular disease with multifrequency electrical impedance myography *Muscle Nerve* **34** 595–602

Kramers H A 1929 Theory of dispersion in the x-ray region *Phys. Z.* **30** 52

Kronig R L 1926 The theory of dispersion of x-rays *J. Opt. Soc. Am.* **12** 547

Kushner R F 1992 Bioelectrical impedance analysis: a review of principles and applications *J. Am. Col. Nutr.* **11** 199–209

Lukaski H C 2003 Regional bioelectrical impedance analysis: applications in health and medicine *Acta Diabetol.* **40** s196–9

Pauly H, Packer L and Schwann H P 1960 Electrical properties of mitochondrial membranes *J. Biophys. Biochem. Cytol.* **7** 589–601

Pliquett U, Nacke T and Schoenbach K 2007 High frequency and low concentration—limitation for impedance measurements *ICEBI 2007, IMFBE Proc.* ed H Scharfetter and R Merva vol 17 pp 12–5

Rutkove S B, Aaron R and Shiffman C A 2002 Localized impedance analysis in the analysis of neuromuscular disease *Muscle Nerve* **25** 390–7

Rutkove S B, Esper G J, Lee K S, Aaron R and Shiffman C A 2005a Electrical impedance myography in the detection of radiculopathy *Muscle Nerve* **32** 335–41

Rutkove S B, Partida R A, Esper G J, Aaron R and Shiffman C A 2005b Electrode position and size in electrical impedance myography *Clin. Neurophys.* **116** 290–9

Rutkove S B, Zhang H, Schoenfeld D A, Raynor E M, Shefner J M, Cudkowicz M E, Chin A B, Aaron R and Shiffman C A 2007 Electrical impedance myography to assess outcome in ALS clinical trials *Clin. Neurophys.* **118** 2413–8

Scharfetter H, Hartinger P, Hinghofer-Szalkay H and Hutten H 1998 A model of artefacts produced by stray capacitance during whole body or segmental bioimpedance spectroscopy *Physiol. Meas.* **19** 247–61

Schwan H P 1957 Electrical properties of tissues and cell suspensions *Adv. Biol. Med. Phys.* **5** 147–209

Schwan H 1999 The practical success of impedance techniques from an historical perspective *Ann. New York Acad. Sci.* **873** 1–12

Shiffman C A, Aaron R, Amoss V, Therrien J and Coomler K 1999 Resistivity and phase in localized BIA *Phys. Med. Biol.* **44** 2409–29

Shiffman C A, Kashuri H and Aaron R 2007 Electrical impedance myography at high frequencies *ICEBI 2007, IFMBE Proc.* ed H Scarfetter and R Merva (Berlin: Springer) pp 739–42